Itani, A.M., Reno, M.L. "Horizontally Curved Bridges."
Bridge Engineering Handbook.
Ed. Wai-Fah Chen and Lian Duan
Boca Raton: CRC Press, 2000

15

Horizontally Curved Bridges

Ahmad M. Itani
University of Nevada at Reno

Mark L. Reno
California Department of Transportation

15.1 Introduction

As a result of complicated geometrics, limited rights of way, and traffic mitigation, horizontally curved bridges are becoming the norm of highway interchanges and urban expressways. This type of superstructure has gained popularity since the early 1960s because it addresses the needs of transportation engineering. Figure 15.1 shows the 20th Street HOV in Denver, Colorado. The structure is composed of curved I-girders that are interconnected to each other by cross frames and are bolted to the bent cap. Cross frames are bolted to the bottom flange while the concrete deck is supported on a permanent metal form deck as shown in Figure 15.2. Figure 15.3 shows the elevation of the bridge and the connection of the plate girders into an integral bent cap. Figure 15.4 shows the U.S. Naval Academy Bridge in Annapolis, Maryland which is a twin steel box-girder bridge that is haunched at the interior support. Figure 15.5 shows Ramp Y at I-95 Davies Blvd. Interchange in Broward County, Florida. The structure is a single steel box girder with an integral bent cap. Figure 15.6 shows a photo of Route 92/101 Interchange in San Mateo, California. The structure is composed of several cast-in-place curved P/S box-girder bridges.

The American Association of Highway and Transportation Officials (AASHTO) governs the structural design of horizontally curved bridges through *Guide Specifications for Horizontally Curved Highway Bridges* [1]. This guide was developed by Consortium of University Research Teams (CURT) in 1976 [2] and was first published by AASHTO in 1980. In its first edition the guide specification included allowable stress design (ASD) provisions that was developed by CURT and load factor design (LFD) provisions that were developed by American Iron and Steel Institute under project 190 [15]. Several changes have been made to the guide specifications since 1981. In 1993 a new version of the guide specifications was released by AASHTO. However, these new specifications did not include the latest extensive research in this area nor the important changes that affected the design of straight I-girder steel bridges.

FIGURE 15.1 Curved I-girder bridge under construction — 20th St. HOV, Denver, Colorado.

FIGURE 15.2 Bottom view of curved I-girder bridge.

FIGURE 15.3 Curved I-girder bridge with integral bent cap.

The guide specifications for horizontally curved bridges under Project 12-38 of the National Cooperative Highway Research Program (NCHRP) [3] have been modified to reflect the current state-of-the-art knowledge. The findings of this project are fully documented in NCHRP interim reports: "I Girder Curvature Study" and "Curved Girder Design and Construction, Current Practice" [3]. The new "Guide Specifications for Horizontally Curved Steel Girder Highway Bridges" [18] proposed by Hall and Yeo was adopted as AASHTO Guide specifications in May, 1999. In addition to these significant changes, the Federal Highway Administration (FHWA) sponsored extensive theoretical and experimental research programs on curved girder bridges. It is anticipated that these programs will further improve the current curved girder specifications. Currently, the NCHRP 12–50 is developing "LRFD Specifications for Horizontally Curved Steel Girder Bridges" [19].

The guidelines of curved bridges are mainly geared toward structural steel bridges. Limited information can be found in the literature regarding the structural design of curved structural concrete (R/C and P/S) bridges. Curved structural concrete bridges have a box shape, which makes the torsional stiffness very high and thus reduces the effect of curvature on the structural design.

The objective of this chapter is to present guidelines for the design of curved highway bridges. Structural design of steel I-girder, steel, and P/S box-girder bridges is the main thrust of this chapter.

15.2 Structural Analysis for Curved Bridges

The accuracy of structural analysis depends on the analysis method selected. The main purpose of structural analysis is to determine the member actions due to applied loads. In order to achieve reliable structural analysis, the following items should be properly considered:

- Mathematical model and boundary conditions
- Application of loads

FIGURE 15.4 Twin box-girder bridge — U.S. Naval Academy Bridge, Annapolis, Maryland.

FIGURE 15.5 Single box girder bridge with integral bent cap — Ramp Y, I-95 Davies Blvd., Broward County, Florida.

FIGURE 15.6 Curved concrete box-girder bridges — Route 92/101 Interchange, San Mateo, California.

The mathematical model should reflect the structural stiffness properly. The deck of the superstructure should be modeled in such a way that is represented as a beam in a grid system or as a continuum. The boundary conditions in the mathematical model must be represented properly. Lateral bearing restraint is one of the most important conditions in curved bridges because it affects the design of the superstructure. The deck overhang, which carries a rail, provides a significant torsion resistance. Moreover, the curved bottom flange would participate in resisting vertical load. This participation increases the applied stresses beyond those determined by using simple structural mechanics procedures [3].

Due to geometric complexities, the gravity load will induce torsional shear stresses, warping normal stresses, and flexural stresses to the structural components of horizontally curved bridges. To determine these stresses, special analysis accounting for torsion is required. Various methods were developed for the analysis of horizontally curved bridges, which include simplified and refined analysis methods. The simplified methods such as the *V-Load* method [4] for I-girders and the *M/R* method for box girders are normally used with "regular" curved bridges. However, refined analysis will be required whenever the curved bridges include skews and lateral or rotational restraint. Most refined methods are forms of finite-element analysis. Grillage analysis as well as three-dimensional (3-D) models have been used successfully to analyze curved bridges. The grillage method assumes that the member can be represented in a series of beam elements. Loads are normally applied through a combination of vertical and torsion loads. The 3-D models that represent the actual depth of the superstructure will capture the torsion responses by combining the responses of several bridge elements.

15.2.1 Simplified Method: V-Load

In 1984, AISC Marketing, Inc. published "V-Load Analysis" for curved steel bridges [4]. This report presented an approximate simplified analysis method to determine moments and shears for horizontally

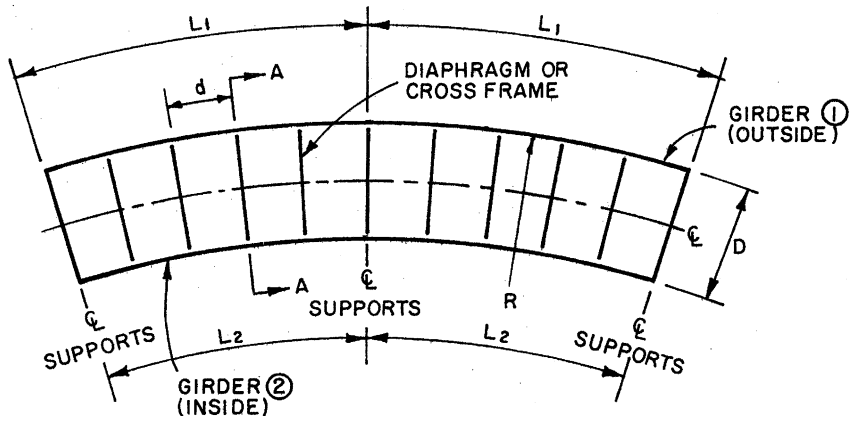

FIGURE 15.7 Plan view of two-span curved bridge.

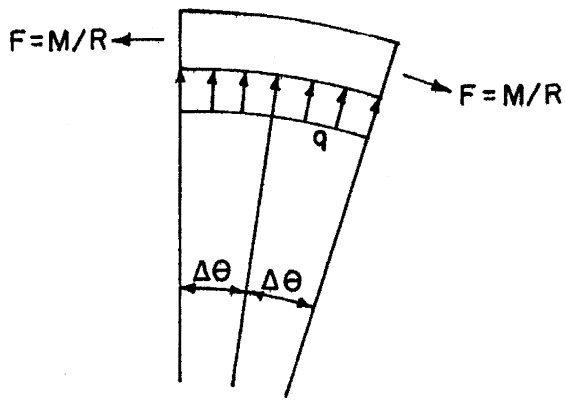

FIGURE 15.8 Plan view of curved bridge top flange.

curved open-framed highway bridges. This method is known as the V-Load method because a large part of the torsion load on the girders is approximated by sets of vertical shears known as "V-Loads." The V-Load method is a two-step process. First, the bridge is straightened out so that the applied vertical load is assumed to induce only flexural stresses. Second, additional fictitious forces are applied to result in final stresses similar to the ones in a curved bridge. The additional fictitious forces are determined so that they result in no net vertical, longitudinal, or transverse forces on the bridge.

Figure 15.7 shows two prismatic girders continuous over one interior support with two equal spans, L_1. Girder 1 has a radius of R and the distance between the girders is D. The cross frames are uniformly spaced at distance equal to d. As shown later, the cross frames in curved bridges are primary members since they are required to resist the radial forces applied on the girder due to bridge curvature.

When the gravity load is applied, the flanges of the plate girder will be subjected to axial forces $F = M/R$, as shown in Figure 15.8. However, due to the curvature of the girder, laterally distributed load q will be applied to flanges of the plate girder in order to achieve equilibrium. By assuming that the flanges resist most of the bending moment, the longitudinal forces in the flanges at any point will be equal to the moment, M, divided by the section height, h. Due to the curvature of the bridge, these forces are not collinear along any given segment of the flange. Thus, radial forces must be developed along the girder in order to maintain equilibrium. The forces cause lateral bending

of the girder flanges resulting in warping stresses. The magnitude of the radial forces is equal to *M/hR* and has the same shape of the bending moment diagram as shown in Figure 15.9.

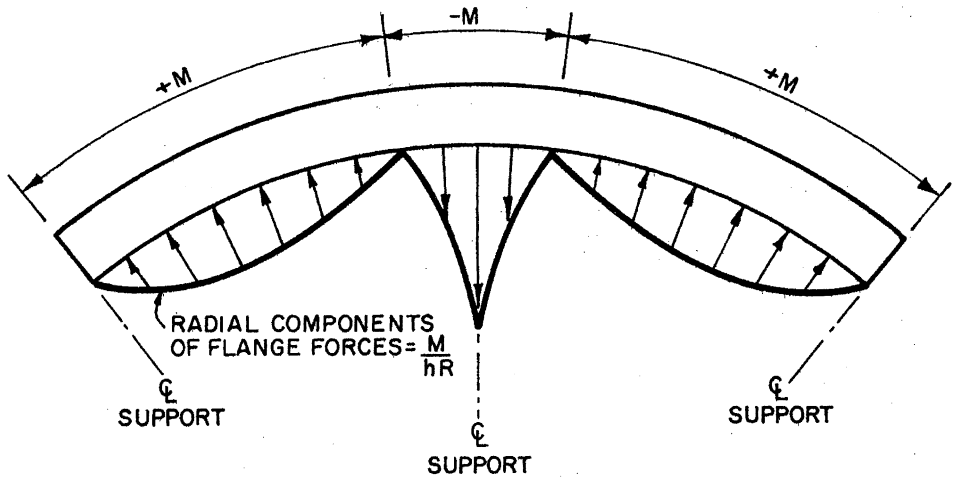

FIGURE 15.9 Lateral forces on curved girder flange.

This distributed load creates equal and opposite reaction forces at every cross frame as shown in Figure 15.10. By assuming the spacing between the cross frames is equal to *d*, the reaction force at the cross frame is equal to *H*, which is equal to *Md/hR*.

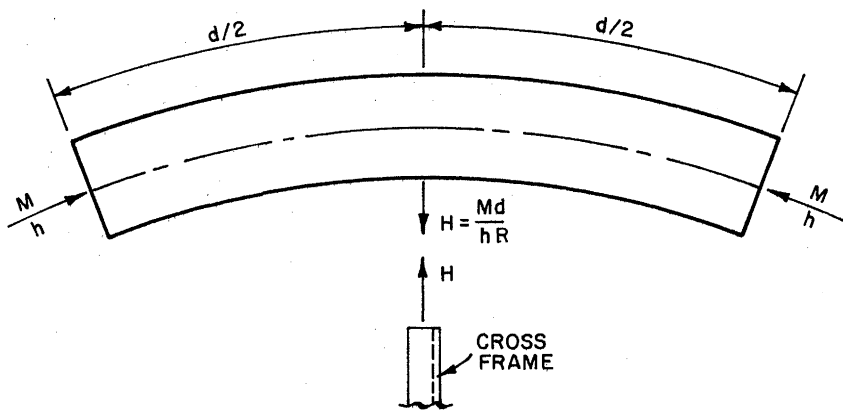

FIGURE 15.10 Reaction at cross frame location.

To maintain equilibrium of the cross frame forces, vertical shear forces must develop at the end of the cross frames as a result of cross frame rigidity and end fixity as shown in Figure 15.11.

15.3 Curved Steel I-Girder Bridges

15.3.1 Geometric Parameters

According to the current AASHTO specifications [13], the effect of curvature may be neglected in determining the primary bending moment in longitudinal members when the central angle of each span in a two or more span bridge is less than 5° for five longitudinal girders. The framing system

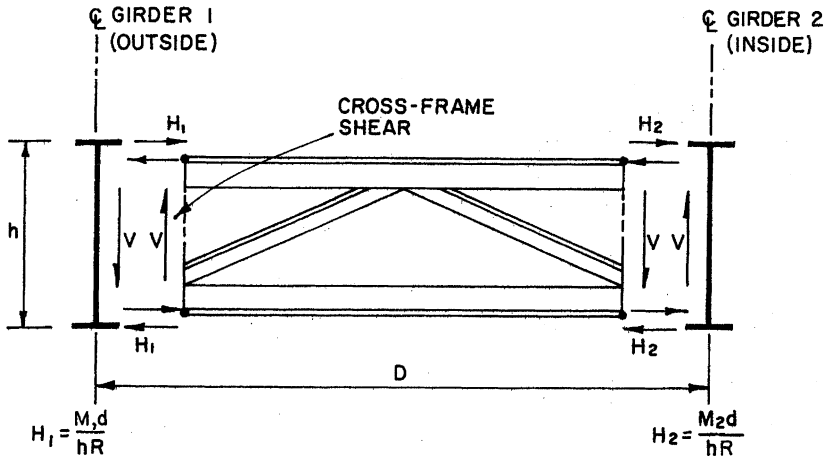

FIGURE 15.11 Equilibrium at cross frame location and the formation of V-loads.

for curved I-girder bridges may follow the preliminary design of straight bridges in terms of span arrangement, girder spacing, girder depth, and cross frame types. The choice of the exterior span length is normally set to give relatively equal positive dead-load moments in the exterior and interior spans. The arrangement results in the largest possible negative moment, which reduces both positive moments and related deflections. Normally, the depth of the superstructure is the same for all spans. Previous successful design showed a depth-to-span ratio equal to 25 for the exterior girder to be adequate. This ratio has been based on vibration and stiffness needed to construct the plate girders. Also, this ratio helps to ensure that the girders do not experience excessive vertical deflections. The uplift of the exterior girder should be prevented as much by extending the span length of the exterior girder rather than dealing with the use of tie-down devices.

Girder spacing plays a significant role in the deck design and the determination of the number of girders. Wider spacing tends to increase the dead load on the girders, while closer spacing requires additional girders, which increases the fabrication and erections costs. For curved steel I-girder bridges, the girder spacing varies between 3.05 m (10 ft) and 4.87 m (16 ft). Wider spacing, common in Europe and Japan, requires a post-tensioned concrete deck, which is not common practice in the United States. The overhang length should not exceed 1.22 m (4 ft) because it tends to increase the load on the exterior girders by adding more dead load and permitting truckload to be applied on the cantilever. The flanges of the plate girder should have a minimum width to avoid out-of-plane buckling during construction. Many steel erectors limit the length of girder shipping pieces to 85 times the flange width [5]. Based on that, many bridge engineers tend to limit the width of the flange to 40.6 mm (16 in) based on a maximum shipping length equal to 36.6 m (120 ft). It is also recommended that the minimum web thickness be limited to 11.1 mm (7/16 in) because of weld distortion problems. The thickness of the web depends on its depth and the spacing of the transverse stiffeners. This represents a trade-off between having extra material or adding more stiffeners. Many bridge engineers use the ratio of D/t=150 to choose the thickness of the web.

The spacing of the cross frame plays an important factor in the amount of force carried out by it and the value of flange lateral bending. Normally, cross-frame spacing is held between 4.57 m (15 ft) and 7.62 m (25 ft).

15.3.2 Design Criteria

The design guidelines, according to the Recommended Specifications for Steel Curved Girder Bridges [3], are established based on the following principles:

- Statics
- Stability

- Strength of materials
- Inelastic behavior

External and internal static equilibrium should be maintained under every expected loading condition. Stability of curved steel girder bridges is a very important issue especially during construction. By their nature, curved girders experience lateral deflection when subjected to gravity loading. Therefore, these girders should be braced at specified intervals to prevent lateral torsional buckling. The compactness ratio of the web and the flanges of curved I-girders are similar to the straight girders. The linear strain distribution is normally assumed in the design of curved girder bridges. The design specification recognizes that compact steel sections can undergo inelastic deformations; however, current U.S. practice does not utilize a compact steel section in the design of curved I-girder bridges.

The design criteria for curved girder bridges can be divided into two main sections.

- Strength
- Serviceability

Limit state design procedures are normally used for the strength design, which includes flexure and shear. Service load design procedures are used for fatigue design and deflection control. The primary members should be designed to be such that their applied stress ranges are below the allowable fatigue stress ranges according to AASHTO fatigue provisions [6]. The deflection check is used to ensure the serviceability of the bridge. According to the recommended specifications for the design of curved steel bridges [3], the superstructure should be first analyzed to determine the first mode of flexural vibration. The frequency of this mode is used to check the allowable deflection of the bridge as indicated in the *Ontario Bridge Code* [7].

15.3.3 Design Example

Following the 1994 Northridge Earthquake in California, the California Department of Transportation (Caltrans) embarked on a task of rebuilding damaged freeways as soon as possible. At the SR 14–I-5 interchange in the San Fernando Valley, several spans of cast-in-place prestressed concrete box girders have collapsed [9]. These were the same ramps that were previously damaged during the 1971 San Fernando Earthquake [8]. Because of the urgency of completion and the restrictions on geometry, steel plate girders were considered a viable replacement alternative. The idea was that the girders could be fabricated while the substructure was being constructed. Once the footings and columns were completed, the finished girders would be delivered to the job site. Therefore, in a period of 5 weeks Caltrans designed two different alternatives for two ramps approximately 396 m (1300 ft) and 457 m (1500 ft) in length. The South Connector Ramp will be discussed in this section. The "As-Built" South Connector was approximately 397 m (1302 ft) in length set on a horizontal curve with a radius of 198 m (650 ft) producing a superelevation of 11%. This ramp was designed utilizing Bridge Software Development International (BSDI) curved girder software package [10] as one frame with expansion joints at the abutments. This computer program is considered one of the most-advanced programs for the analysis and design of curved girder bridges. The program analyses the curved girders based on 3-D finite-element analysis and utilizes the influence surface for live-load analysis. The program has also an interactive postprocessor for performing designs and code checking. The design part of the program follows the 15th edition of AASHTO [13] and the Curved Girder Guide Specifications [1]. The ramp was then checked using DESCUS I [14], another software package, and spot-checked with in-house programs developed by Caltrans. A cross-sectional width of 11.43 m (37.5 ft) was selected for two lanes of traffic (3.66 m, 12 ft), two shoulders (1.52 m, 5 ft), and two concrete barriers (0.533 m, 1.75 ft). This ramp has a 212.7 mm (8⅜ inch) concrete deck, which was composite with four continuous welded plate girders with bolted field splices for erection. The material selected was A709 Grade 50W. The spans ranged from

35.97 m (118 ft) up to 66.44 m (218 ft) in length, which meant the girder depths alone were around 2.2 m (7.25 ft) deep and the composite section was 2.44 m (8 ft) deep. The cross frames were a mixture of inverted K frames and plate diaphragms at the bents. The K frames were inverted so as to place the catwalks between the girders, and the braces were changed to plate sections at the bents to help handle the large seismic forces that are transmitted from the superstructure to the "hammerhead" bent caps both longitudinally and transversely. The bracing was designed for both live-load and seismic-load conditions. Figure 15.12 shows the elevation of intermediate cross frames. The bracing was held to a spacing of less than 6.1 m (20 ft).

The BSDI program works by placing unit loads on a defined geometry pattern of the deck. Then an influence surface is developed so that application of loads for maximum and minimum stresses becomes a simple numerical solution. This program was thoroughly checked utilizing the V-Load method and using an SC-Bridge package that utilizes GT Strudl [11] for the moving load generator. Good correlation was seen by all methods with the exception of the V-Load, which consistently gave more conservative results. As is frequently the case with curved girders, the outside girder ends up being designed heavier than the remaining sections. This difference can be as little as 15%, but as great at 40%, depending on location. It should also be understood that by designing a stiffer girder for the outside, there is the tendency to attract more loads, thereby requiring more material. This is a similar phenomenon to that seen in seismic design. The BSDI system allows the designer to check for construction loads and sequencing. This was absolutely critical on a project like this as the girder sections were often controlled by the sequence of construction load application. Limits on concrete pours were set around limiting stresses on the girders.

Girder plate sizes were optimized both for the design and for the fabrication. A typical span would have five different sections in it. There were two sections at either end over the bents. The top and bottom flanges were very similar at point of maximum negative moment. Then on either side a transition section would be utilized until the inflection point. Finally, a maximum positive section where there is usually a significant difference in the top and bottom flanges was designed. The elevation of the plate girder that shows the different flange dimensions is shown in Figure 15.13. The five different flange dimensions were justified by considering the material costs vs. the welded splice costs. In addition, the "transition" sections were often sized such that the top flange width was the same as the negative moment sections. This way the plates could be welded end to end and then all four girders could be cut on one bed with one operation, saving handling costs. Plate sections were also set based on erection and shipping capabilities.

Steel was a good choice of structure type for this project because of the seismic risk, which exists in this location. Several faults pass in the vicinity of this interchange, and the structure would be subjected to "near-fault" phenomenon. This structure was designed with vertical acceleration. The plate girder with concrete deck superstructure weighs one third as much as the traditional cast-in-place box structure. Some ductile steel details were developed for this project [12]. Since the girders rest on a hammerhead bent cap, the load transfer mechanism is through the bearings and the shear can be as much as the plastic shear of the column. To make this load transfer possible, plate diaphragms were designed at the bent caps. With the plates in place, a concrete diaphragm could be poured that would not only add stiffness, but strength to handle these large seismic forces. The diaphragms were approximately 0.91 m (3 ft) wide by the depth of the girder. The plates were covered with shear studs and reinforcing was placed prior to the concrete. In addition, pipe shear keys were installed in the top of the bent cap on either side of the diaphragm. This structure was redundant in that if the displacements were excessive, the pipes would be engaged.

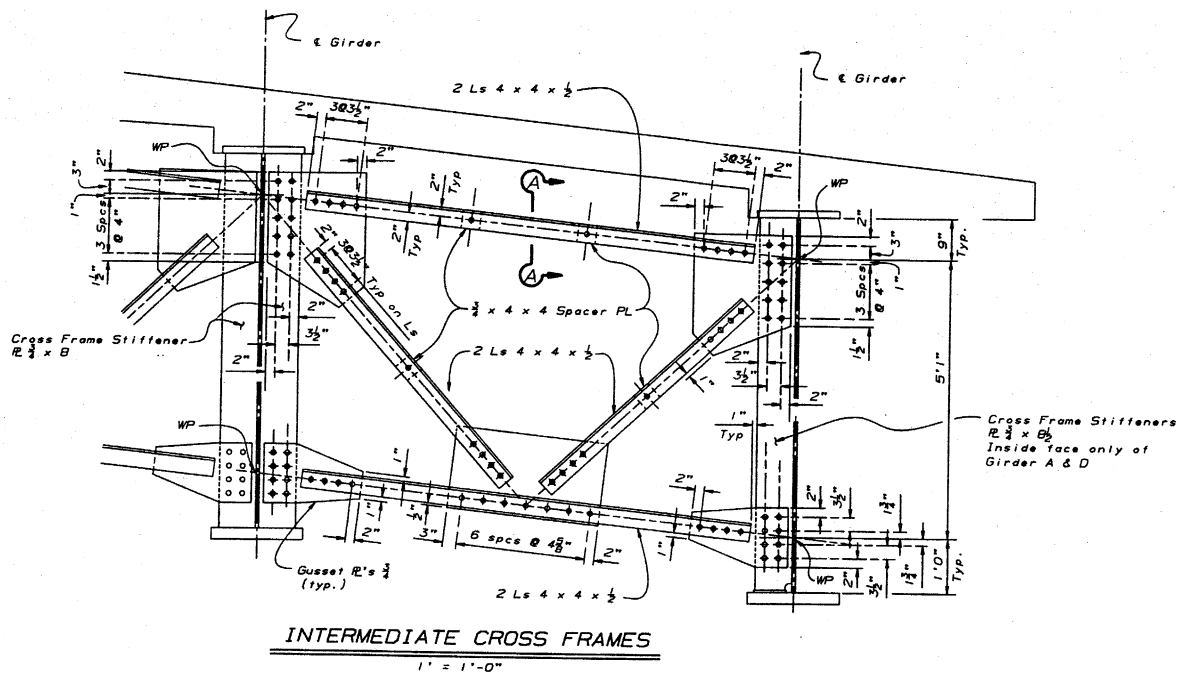

FIGURE 15.12 Elevation of intermediate cross frames.

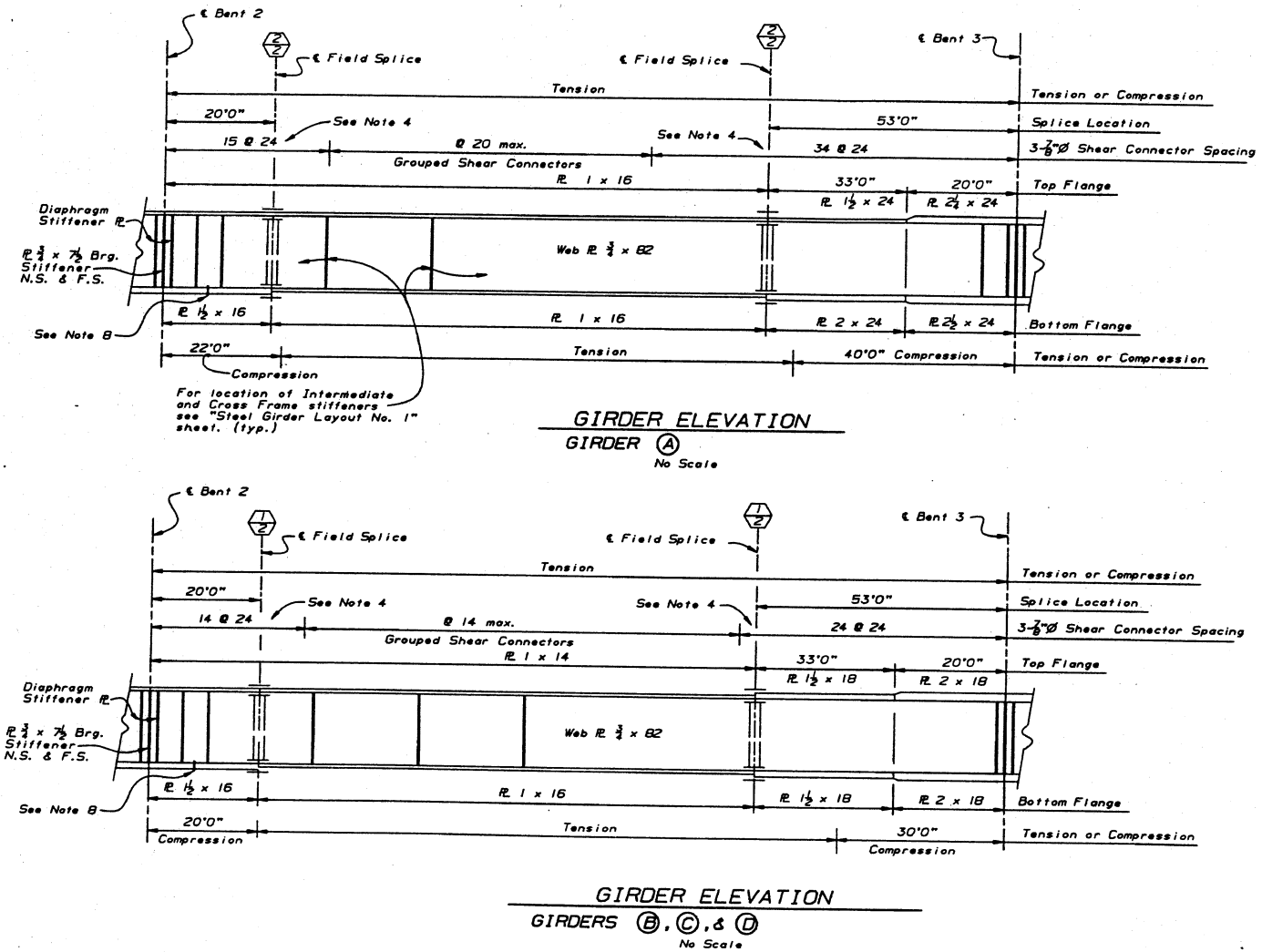

FIGURE 15.13 Elevation of interior and exterior curved plate girder.

15.4 Curved Steel Box-Girder Bridges

The most common type of curved steel box girder bridges are tub girders that consist of independent top flanges and cast-in-place reinforced concrete decks. The design guidelines are covered in the "Recommended Specifications for Steel Curved Girder Bridges"[3]. Normally the tub girder is composed of a bottom plate flange, two web plates, and an independent top flange attached to each web. The top flanges should be braced to become capable of resisting loads until the girder acts in a composite manner. The tub girders require internal bracing because of the distortion of the box due to the bending stresses. Finite-element analysis, which accounts for the distortion, is normally utilized to calculate the stresses and displacement of the box.

The webs of the box girder may be inclined with a ratio of one-to-four, width-to-depth. The AASHTO provisions for straight box girders apply for curved boxes regarding the shear capacity of the web and the ultimate capacity of the tub girders. The maximum bending stresses are determined according to the factored loads with the considerations of composite and noncomposite actions. Bending stresses should be checked at critical sections during erection and deck placement. The bending stresses may be assumed uniform across the width of the box. Prior to curing of concrete, the top flanges of tub girders are to be assumed laterally supported at top flange lateral bracing. The longitudinal warping stresses in the bottom flange are computed based on the stiffness and spacing of internal bracing. It is recommended that the warping stresses should not exceed 15% of the maximum bending stresses.

As mentioned earlier, the *M/R* method is usually used to analyze curved box girder bridges. The basic concept behind this method is the conjugate beam analogy. The method loads a conjugate simple span beam with a distributed loading, which is equal to the moment in the real simple or continuous span induced by the applied load divided by the radius of curvature of the girder. The reactions of the supports are obtained and thus the shear diagram can be constructed representing the internal torque diagram of the curved girder. After the concentrated torque at the ends of the floor beam is known, the end shears are computed from statics. These shears are applied as vertical concentrated loads at each cross frame location to determine the moment of the developed girder. This procedure constitutes a convergence process whereby the *M/R* values are applied until convergence is attained.

15.5 Curved Concrete Box-Girder Bridges

Current curved bridge specifications in the United States do not have any guidelines regarding curved concrete box-girder bridges. It is generally believed that the concrete monolithic box girders have high torsional rigidity, which significantly reduces the effect of curvature. However, during the last 15 years a problem has occurred with small-radius horizontally curved, post-tensioned box-girder bridges. The problem has occurred at two known sites during the construction [16]. The problem can be summarized as, during the prestressing of tendons in a curved box girder, they break away from the web tearing all the reinforcement in the web along the profile of the tendon. Immediate inspection of the failure indicated that the tendons exerted radial horizontal pressure along the wall of the outermost web.

In recognition of this problem, Caltrans has prepared and implemented design guidelines since the early 1980s [17]. Charts and reinforcement details were developed to check girder webs for containment of tendons and adequate stirrup reinforcement to resist flexural bending. Caltrans' Memo-to-Designers 11-31 specifies that designers of curved post-tensioned bridges should consider the lateral prestress force, F, for each girder. This force F is equal to the jacking force, P_j, of each girder divided by the horizontal radius of the girder. If the ratio of $P_j/R > 100$ kN/m per girder or

the horizontal radius is equal to 250 m or less, Detail A, as shown in Figure 15.14 should be used. Charts for No. 16 and No. 19 stirrups were developed to be used with the ratio of P_j/R in order to get minimum web thickness and spacing between the No. 16 stirrups, as shown in Figure 15.15.

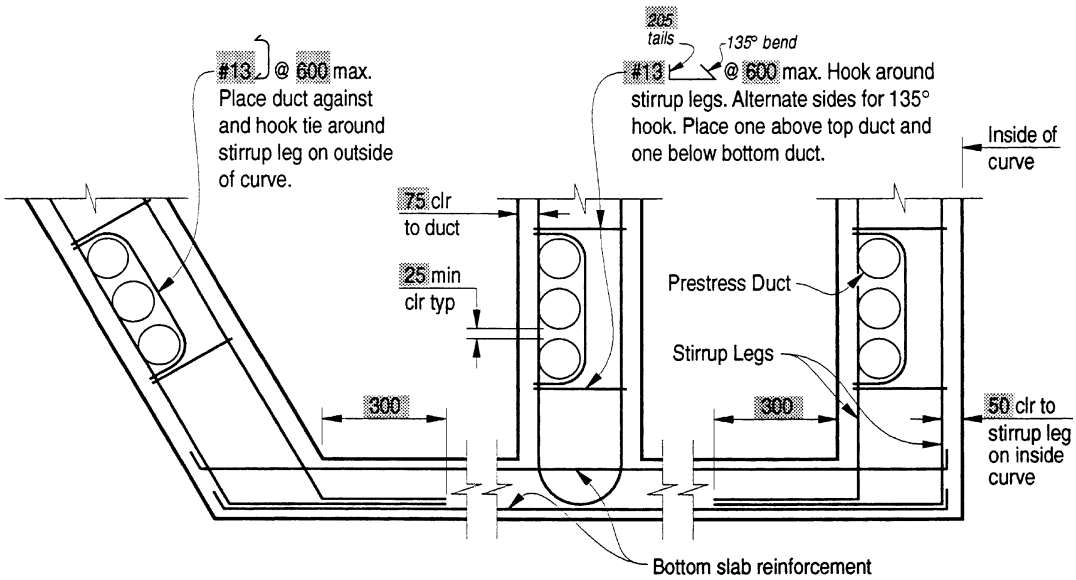

FIGURE 15.14 Caltrans duct detail in curved concrete bridges.

The first step is to enter the chart with the value of F on the vertical axis of the chart and travel horizontally until the height of the web h_c is reached. The chart then indicates the minimum web thickness and the spacing of the No. 16 stirrups.

These charts were developed assuming that the girder web is a beam with a length equal to the clear distance between top and bottom slabs. The lateral force, F, is acting at the center point of the web creating a bending moment in the web. This moment is calculated by the simple beam formula reduced by 20% for continuity between the web and slabs. The value of this bending moment is equal to

$$M_u = 0.8 \frac{P_j}{4R} h_c \tag{15.1}$$

In the commentary of this memo, Caltrans considered the stirrups to be capable of handling the bending and shear stresses for the following reasons:

- M_u is calculated for the maximum conditions of F acting at $h_c/2$. This occurs at only two points in a span due to tendon drape.
- The jacking force, P_j, is used in the calculation of M_u and, at the time P_j is applied, the structure is supported on falsework. When the falsework is removed and vertical shear forces act, the prestressing forces will be reduced by the losses.

In addition, for curve box girders with an inside radius of under 243.8 m (800 ft), intermediate diaphragms are required at a maximum spacing of 24.4 m (80 ft) unless shown otherwise by tests or structural analysis. The code goes further to say that if the inside radius is less than 121.9 m (400 ft), the diaphragm spacing must not exceed 12.2 m (40 ft).

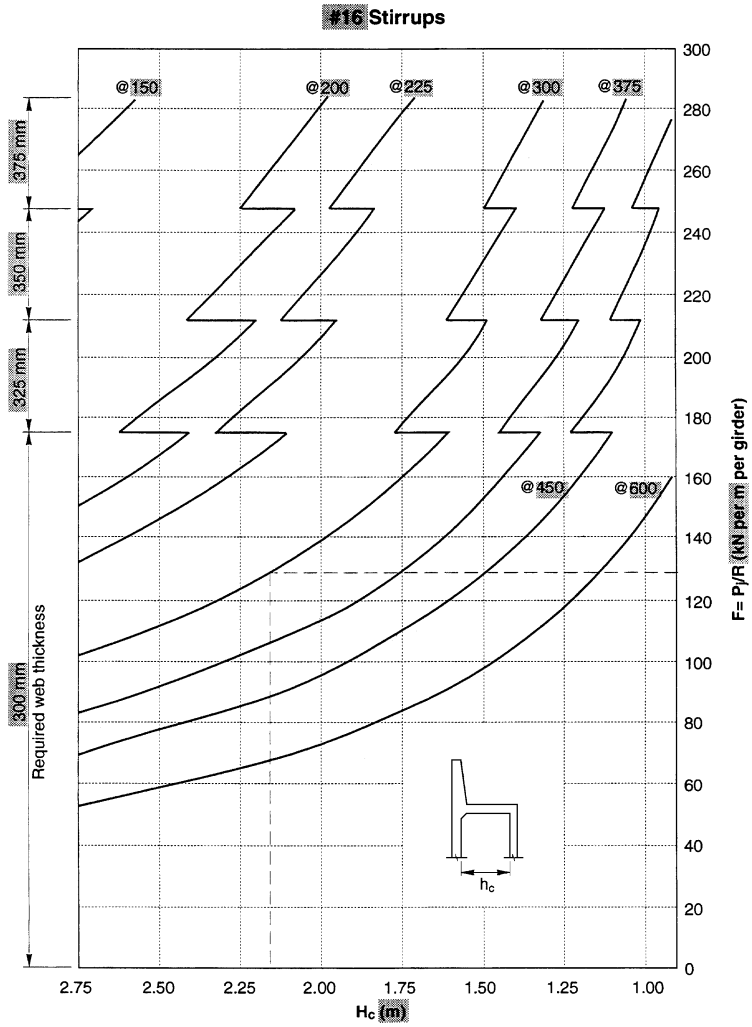

FIGURE 15.15 Caltrans chart design for web thickness and reinforcement.

Acknowledgments

The authors would like to thank Dr. Duan and Prof. Chen for selecting them to participate in this *Bridge Engineering Handbook*. The National Steel Bridge provided the photographs of curved bridges in this document for which the authors are sincerely grateful. The support and the cooperation of Mr. Dan Hall of BSDI are appreciated. Finally, the two authors warmly appreciate the continued support of Caltrans.

References

1. AASHTO, *Guide Specifications for Horizontally Curved Highway Bridges*, American Association of State Highway and Transportation Officials, Washington, D.C., 1993, 1–111.

2. Mozar, J., Cook, J., and Culver, C., Horizontally Curved Highway Bridges-Stability of Curved Plate Girders, Report No. P1, Carnegie-Mellon University, CURT Program, Pittsburgh, PA, Sept. 1971.
3. Hall, D. H. and Yoo, C. H., Curved Girder Design and Construction, Current Practice, NCHRP Project 12-38, 1995, 1–136.
4. V-Load analysis, in *USS Highway Structures Design Handbook*, Vol. 1, AISC Marketing, Inc., Chicago, IL, 1984, chap. 12, 1–56
5. AISC, *Highway Structure Design Handbook*, Newsletter Issue No. 2, AISC Marketing, Chicago, IL, 1991
6. AASHTO, *LRFD Bridge Design Specifications*, American Association of State Highway and Transportation Officials, Washington, D.C, 1994.
7. *Ontario Highway Bridge Design Code*, 3rd ed., Ministry of Transportation and Communications, Highway Engineering Division, Toronto, Ontario, 1991.
8. The San Fernando Earthquake — Field Investigation of Bridge Damage, State of California, Caltrans, Division of Structures, Sacramento, 1991.
9. Northridge Earthquake — Field Investigation of Bridge Damage, State of California, Caltrans, Division of Structures, Sacramento, 1994.
10. Hall, D. H., BSDI 3D System, Internal Document, Bridge Software Development International, Ltd., Coopersburg, PA, 1994.
11. *SC-Bridge*, *User's Guide*, Version 2.1, SC Solutions, Mountain View, CA, 1994.
12. Itani, A. and Reno, M., Seismic design of modern steel highway connectors, in *ASCE Structures Congress,* Vol. 2, 1995, 1528–1531.
13. AASHTO, *Standard Specifications for Highway Bridges*, 15th ed. with interim's, American Association of State Highway and Transportation Officials, Washington, D.C., 1994.
14. *DESCUS I and II*, Opti-Mate, Inc., Bethlehem, PA.
15. Analysis and Design of Horizontally Curved Steel Bridges, U.S. Steel Structural Report ADUCO 91063, May 1963.
16. Podolny, W., The cause of cracking in post-tensioned concrete box girder bridges and retrofit procedures, *PCI J.,* March 1985.
17. Caltrans, Bridge Memo-to-Designers, Vol. 1, California Department of Transportation, Sacramento, 1996.
18. Hall, D.H. and Yoo, C.H., Recommended Specifications for Steel Curved-Girder Bridges, NCHRP Project 12–38. BSDI, Ltd., Coopersburg, PA, Dec. 1998.
19. NCHRP (12–52), LRFD Specifications for Horizontally Curved Steel Girder Bridges, Transportation Research Board, Washington, D.C.